NOTES:
1. HATCHED AREAS DENOTE METALLIZATION

OTL 29200525

REVISIONS			
LTR	DESCRIPTION	DATE	APPROVED
–	ECN 11629, RELEASE	9/26/02	RA 9/26/02

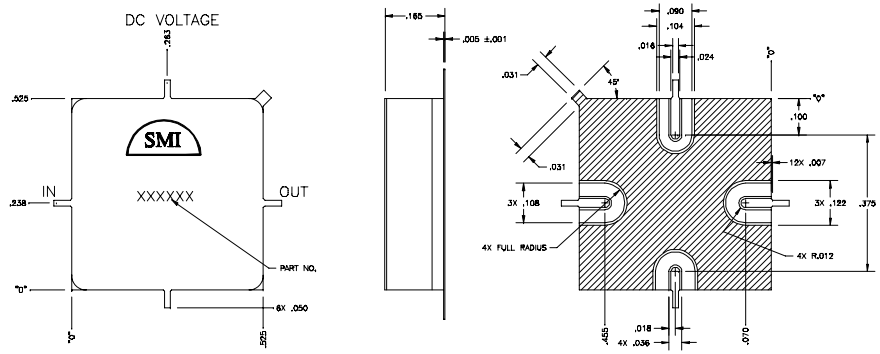

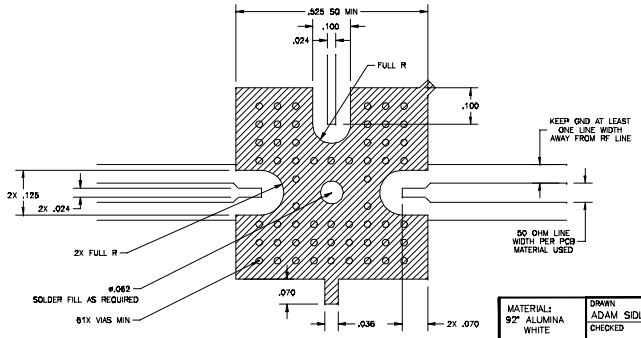

RECOMMENDED FOOT PRINT

MATERIAL: 92" ALUMINA WHITE	DRAWN ADAM SIDLE 9/26/02	DATE	PHILADELPHIA OPERATIONS 2707 BLACK LAKE PLACE, PHILADELPHIA PA, 19154 (USA)
	CHECKED	DATE	
FINISH: NOTED	ENGINEERING AAR 9/26/02	DATE	OUTLINE SM-19 HEADER .525 SQ
DIMENSIONS: INCHES Y14.5M-1994	MANUFACTURING	DATE	
TOLERANCES: DEC. .XX +/- .01 .XXX +/- .005 ANG .X 1° DEG	QUALITY RA 9/26/02	DATE	CODE IDENT NO. 60979 — OTL 29200525
			K:\ENGINEER\ACLTWIN\OUTLINE\SM-19 — SHEET 1 OF 1